BACK TO INDEX

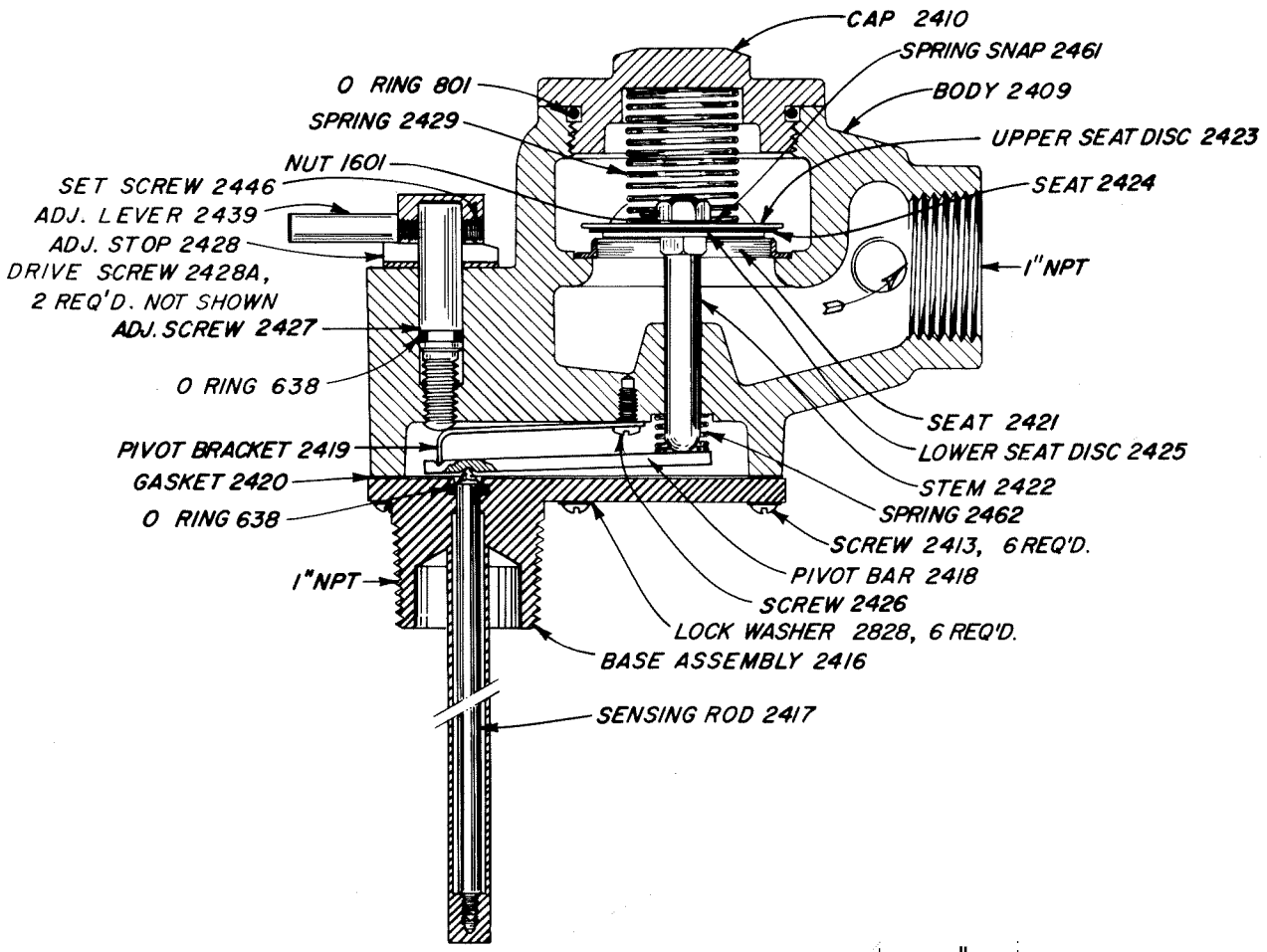

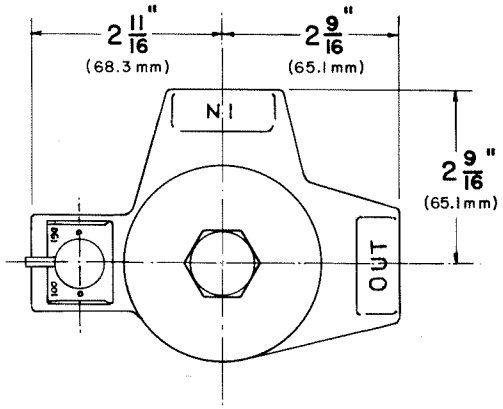

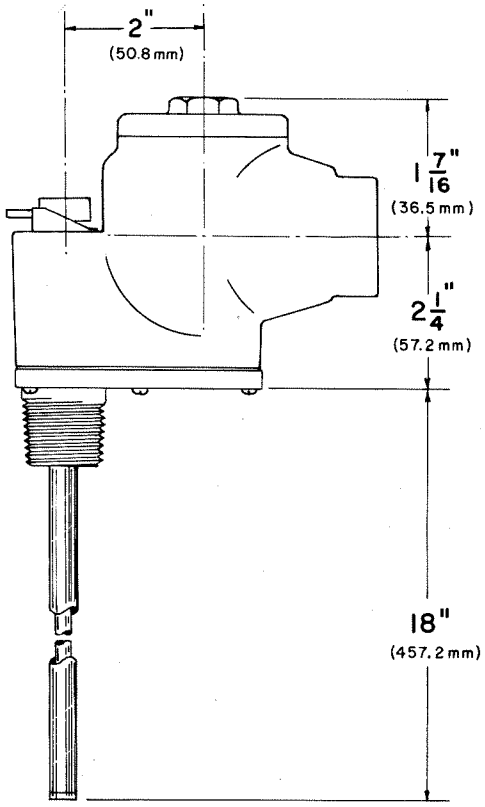

Order by Cat. No. "HCW"

BACK TO INDEX